COMPRESS™

COMPRESSION SCREW

- Adjustable
- Increased "Pull-Out" Strength
- Self Tapping
- Self Drilling
- Proprietary Thread Design
- Ability to Reposition Screw
- Advanced Instrumentation

EXTREMITY MEDICAL™

Surgical Technique

CompressX Compression Screw allows user to adjust the amount of compression across fragments. Available in three sizes (3.0mm, 4.5mm, 6.5mm), CompressX accommodates many uses where compression is needed.

Step One: Template

Template x-ray to estimate screw size and length.

Step Two: Guide Wire Insertion

Use the appropriate drill guide advance guide wire (0.9mm for 3.0 screw, 1.6mm for 4.5 & 6.5 screw) at desired screw placement location.

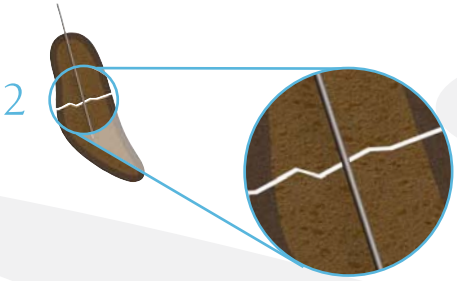

Step Three: Measure Length

Place the screw measuring device over the guide wire and measure the screw length needed. Appropriate length is measured from the end of the guide wire to the corresponding length on the measuring device.

Step Four: Drill

Place the drill guide over the guide wire to protect soft tissue. Place the appropriate cannulated drill (2.0mm for 3.0 screw, 3.4mm for 4.5 screw, 4.5mm for 6.5 screw) over the guide wire and advance drill slowly. Laser markings on the drill can be used to assess appropriate depth needed.

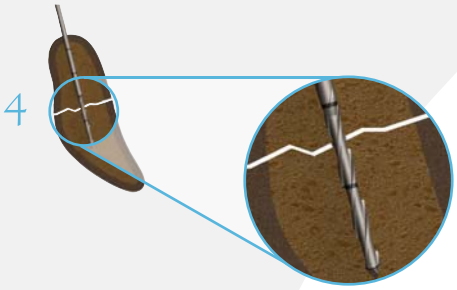

Step Five: Countersink

Place the appropriate countersink over the guide wire and advance until laser line is flush with bone.

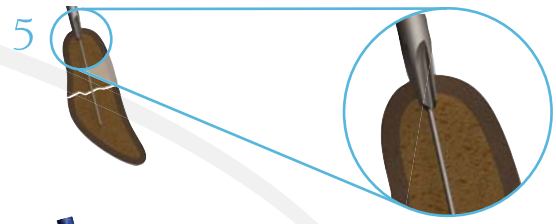

Step Six: Screw Insertion

Use the self holding feature of the hex driver to pick up the correct size screw from tray. Ensure that the compression screw is in the extended position and the driver is in the "screw insertion" mode (compression collar of driver should be against the handle, see illustration). Place the screw and hex driver over the guide wire and advance the screw until all parts of the compression screw are flush with bone. Use fluoroscopy to ensure that screw is in desired position. If you need to reposition screw at this point you can simply unscrew and reposition.

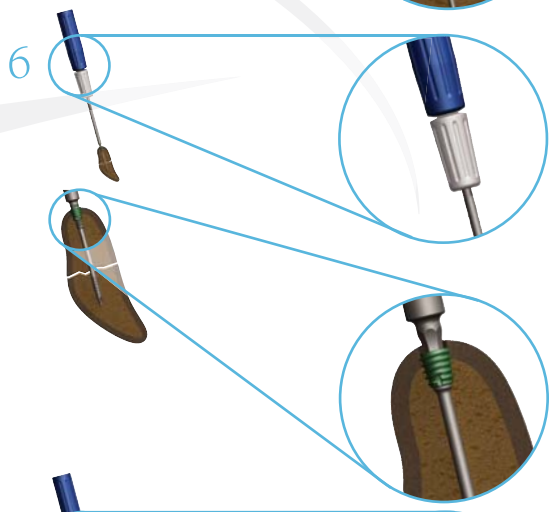

Step Seven: Compression

Once the correct position has been selected, switch the hex driver from the "screw insertion" mode to the "compression mode" (slide the compression collar away from the handle until it locks, see illustration). Once the driver is in the "compression mode" you can advance the compression outer screw by holding the driver handle and turning the compression collar to achieve desired compression. If at this point, there is a need to reposition the screw, simply pull compression collar back toward handle, unscrew and reposition.

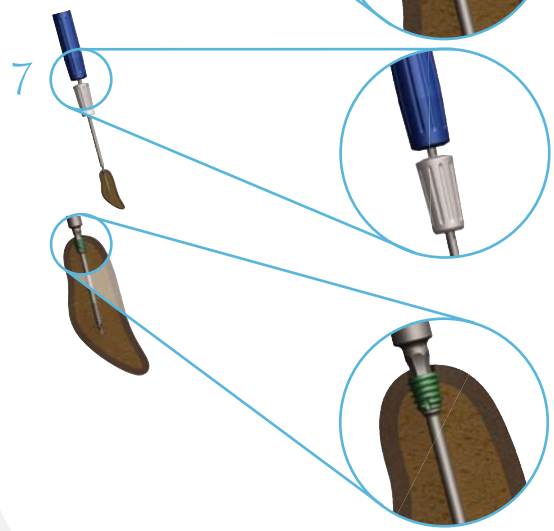

Step Eight: Closure

Remove the guide wire and use appropriate closure technique.

CompressX™ COMPRESSION SCREW

3.0 Screw (Measurement in mm)	Shaft Diameter	Major Diameter	Minor Diameter
Length- 16mm to 40mm in 2mm increments	2.0	3.0	2.0

4.5 Screw (Measurement in mm)	Shaft Diameter	Major Diameter	Minor Diameter
Length- 26mm to 40mm in 2mm increments 40mm to 60mm in 4mm increments	3.4	4.5	3.0

6.5 Screw (Measurement in mm)	Shaft Diameter	Major Diameter	Minor Diameter
Length- 30mm to 90mm in 5mm increments	4.5	6.5	3.0

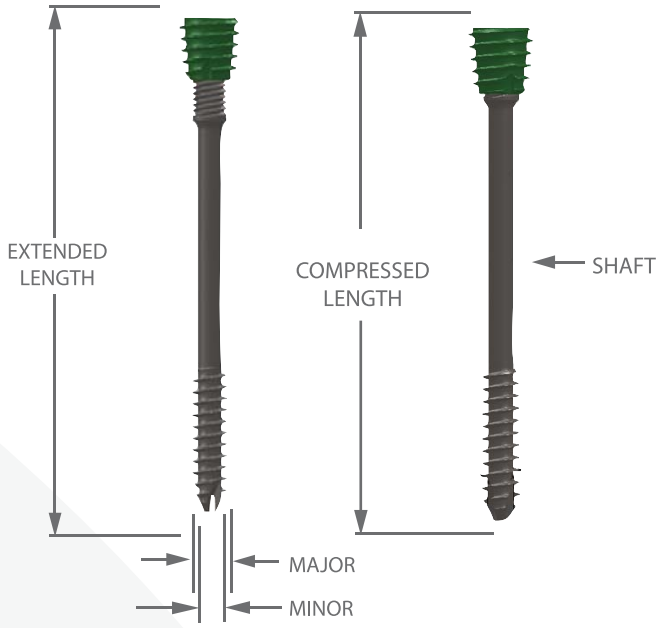

101-00000
Instrument Tray

101-00020
3.0 Screw Driver

101-00021
4.5 and 6.5mm Screw Driver

CompressX Screw Catalog Numbers					
3.0 CompressX Screw		4.5 CompressX Screw		6.5 CompressX Screw	
101-30016	3.0 x 16mm	101-45026	4.5 x 26mm	101-65030	6.5 x 30mm
101-30018	3.0 x 18mm	101-45028	4.5 x 28mm	101-65035	6.5 x 35mm
101-30020	3.0 x 20mm	101-45030	4.5 x 30mm	101-65040	6.5 x 40mm
101-30022	3.0 x 22mm	101-45032	4.5 x 32mm	101-65045	6.5 x 45mm
101-30024	3.0 x 24mm	101-45034	4.5 x 34mm	101-65050	6.5 x 50mm
101-30026	3.0 x 26mm	101-45036	4.5 x 36mm	101-65055	6.5 x 55mm
101-30028	3.0 x 28mm	101-45038	4.5 x 38mm	101-65060	6.5 x 60mm
101-30030	3.0 x 30mm	101-45040	4.5 x 40mm	101-65065	6.5 x 65mm
101-30032	3.0 x 32mm	101-45044	4.5 x 44mm	101-65070	6.5 x 70mm
101-30034	3.0 x 34mm	101-45048	4.5 x 48mm	101-65075	6.5 x 75mm
101-30036	3.0 x 36mm	101-45052	4.5 x 52mm	101-65080	6.5 x 80mm
101-30038	3.0 x 38mm	101-45056	4.5 x 56mm	101-65085	6.5 x 85mm
101-30040	3.0 x 40mm	101-45060	4.5 x 60mm	101-65090	6.5 x 90mm

CompressX Instrument Sets	
101-00000	Instrument Tray
101-00001	3.0mm Screw Caddie
101-00002	4.5 / 6.5mm Screw Caddie
101-00004	Guide Wire 0.9mm
101-00006	Guide Wire 1.6mm
101-00008	Guide Wire Holder 0.9mm
101-00009	Guide Wire Holder 1.6mm
101-00010	Screw Measuring Device
101-00011	2.0mm Cannulated Drill
101-00012	3.4mm Cannulated Drill
101-00013	4.5mm Cannulated Drill
101-00014	3.0mm Countersink
101-00015	4.5mm and 6.5mm Countersink
101-00016	3.0mm Guide - Drill and Guide Wire
101-00017	4.5mm Guide - Drill and Guide Wire
101-00018	6.5mm Guide - Drill and Guide Wire
101-00027	3.0mm Tissue Protector
101-00019	4.5mm / 6.5mm Tissue Protector
101-00020	3.0 Screw Driver
101-00021	4.5 and 6.5mm Screw Driver
101-00022	Cleaning Brush - 0.9mm
101-00023	Cleaning Brush - 1.6mm

Patent Pending
US federal law restricts the use of this device to sale by or on the order of a physician, LBL-101-99102-EN REV A

300 Interpace Parkway • Suite 410 • Parsippany, NJ 07054
Phone: 973.588.8980 • Customer Service: 888.499.0079 • Fax: 888.499.0542
www.extremitymedical.com

EXTREMITY MEDICAL™